POWER SCHEMATIC DIAGRAM
(POWER PCB)

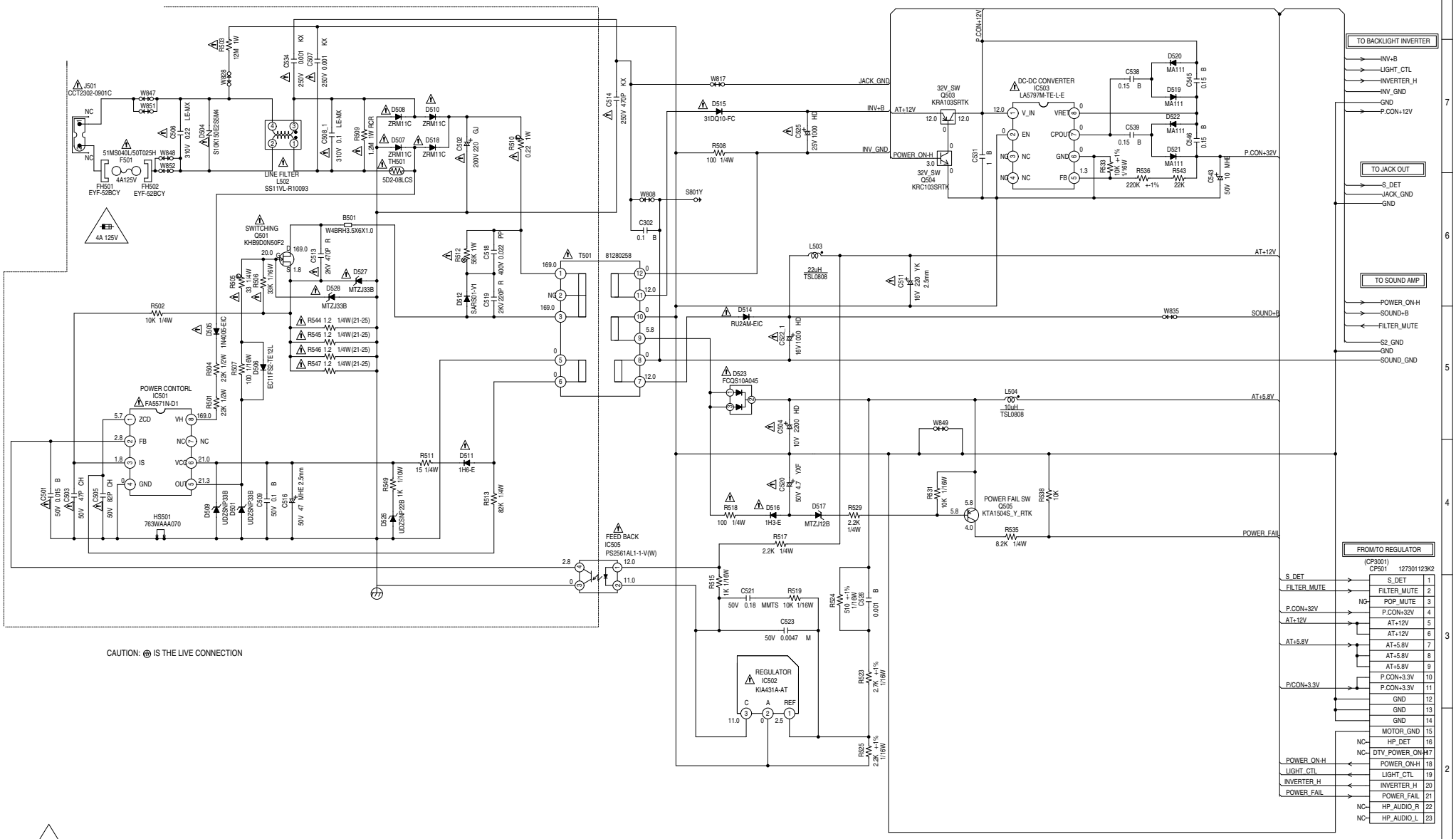

CAUTION: ⏚ IS THE LIVE CONNECTION

CAUTION: FOR CONTINUED PROTECTION AGAINST FIRE HAZARD, REPLACE ONLY WITH THE SAME TYPE FUSE 4A 125V (F501)

ATTENTION: POUR UNE PROTECTION CONTINUE LES RISQUES D'INCEIE N'UTILISER QUE DES FUSIBLE DE MEME TYPE 4A 125V (F501)

NOTE: THE RESISTOR MARKED F IS FUSE RESISTOR.
THE ALUMI ELECTROLYTIC CAPACITOR MARKED NP IS NON POLAR ONE.

NOTE: THIS SCHEMATIC DIAGRAM IS THE LATEST AT THE TIME OF PRINTING AND SUBJECT TO CHANGE WITHOUT NOTICE

NOTE: THE DC VOLTAGE AT EACH PART WAS MEASURED WITH THE DIGITAL TESTER WHEN THE COLOR BROADCAST WAS RECEIVED IN GOOD CONDITION AND PICTURE IS NORMAL.

CAUTION: SINCE THESE PARTS MARKED BY ⚠ ARE CRITICAL FOR SAFETY, USE ONES DESCRIBED IN PARTS LIST ONLY 。

ATTENTION: LES PIECES REPAREES PAR UN ⚠ ETANT DANGEREUSES AN POINT DE VUE SECURITE N'UTILISER QUE CELLS DECRITES DANS LA NOMENCLATURE DES PIECES

CAUTION: DIGITAL TRANSISTOR

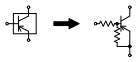

CAUTION: DIGITAL TRANSISTOR

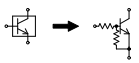

PCB240
CEH434